FIRST ANGLE PROJECTION (ALL DIMENSIONS IN MILLIMETRES)

DRAWING No. 2-80-655-15988

CAUTION THE INFORMATION ON THIS DOCUMENT IS THE PROPERTY OF BHARAT HEAVY ELECTRICALS LTD. IT MUST NOT BE USED DIRECTLY OR INDIRECTLY IN ANY WAY DETRIMENTAL TO THE INTEREST OF THE COMPANY.

05-228/C

** BRANCH PIPE SHALL BE CUT TO SUIT THE OUTER SURFACE OF THE MAIN PIPE SUCH THAT A UNIFORM GAP OF 2mm IS MAINTAINED THROUGHOUT

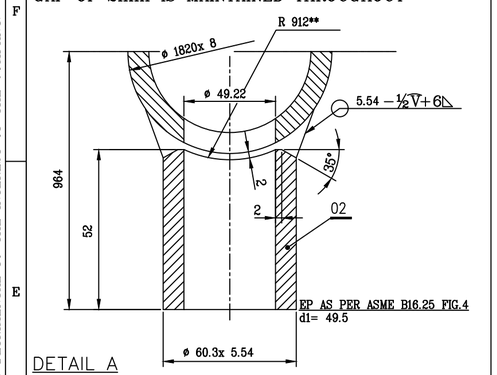

DETAIL A

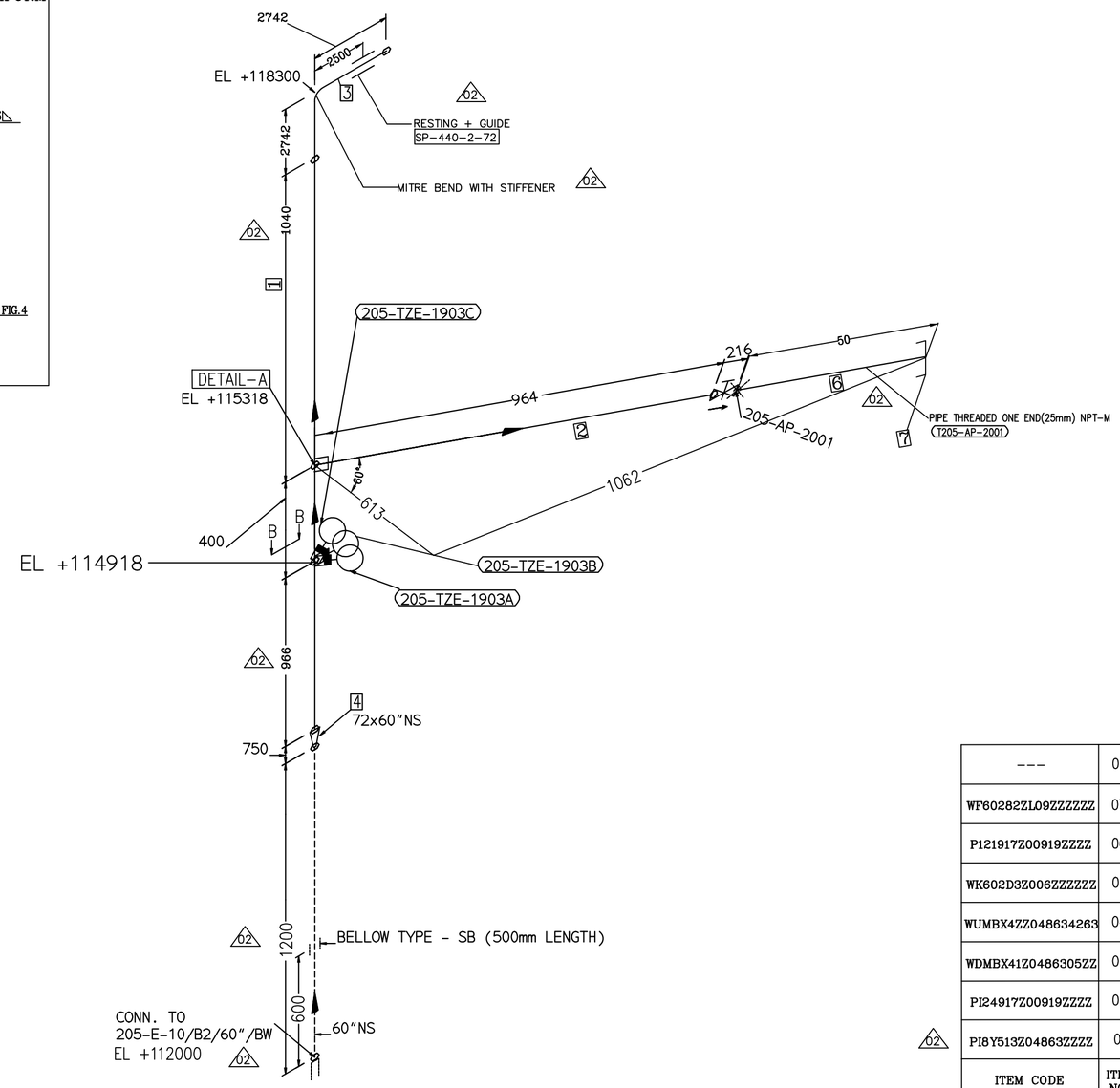

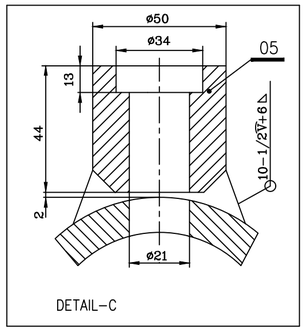

DETAIL-C

NOTES:

ALL DIMENSIONS ARE IN MILLIMETRES

1. DESIGN PRESSURE – 0.2 KG/CM2 (G) DESIGN TEMPERATURE: 490°C
2. FOR STANDARD NOTES OF PRODUCTION AND ERECTION OF PIPES AND TOLERANCE ON FITTINGS REFER DRG NO. 4-80-001-37654 & 4-80-301-26192
3. FOLLOW APPLICABLE QP AND PAINTING SCHEDULE FOR THE PROJECT
4. ALL UNMARKED BENDS/ELBOWS ARE 90 DEG
5. PIPE ENDS SHALL BE BEVELLED AS PER B16.25 FIG.4
6. GASKET IS SUPPLIED VIDE 7419-80-733 PGMA.
7. FOR ELECTRODE DATA REFER

PIPE SIZE	MATERIAL SPEC	EP FIG	WELD SPEC	ELECTRODE DATA	
				ROOT RUN	FILLER RUN
OD1820x8	ASTM A387GR.11CL.2	FIG-A	8 V	ER70S-B2L/ ER80S-B2	ER70S-B2L/ ER80S-B2/E7016 -B2L/E7018-B2L

01 8. O INDICATES WELD AT SHOP.

01 9. X INDICATES WELD AT SITE.

ITEM CODE	ITEM NO.	DESCRIPTION	DRAWING NO.	ITEM NO. / VAR	MATERIAL CODE / MATERIAL SPEC.	A / C	UNIT WT. / QTY.
---	08	PLUG B16.11 SCRM 3000# 1"	2-80-655-15988		--- / ASTM A 182GrF11 CL2	C	0 430 / 3
WF60282ZL09ZZZZZZ	07	CAP B16.11 SCRF 3000# 2"	2-80-655-15988		--- / ASTM A 182GrF11 CL2	C	0 644 / 1
P121917Z00919ZZZZ	06	PIPE OD60.3X5.54 L=50	2-80-655-15988		--- / SA335P11	C	0 370 / 1
WK602D3Z006ZZZZZZ	05	B16.11 SW HALF COUPLING 1" CL.6000	4-80-655-83168		--- / ASTM A 387 GR.11 CL.2	C	0 570 / 3
WUMBX4ZZ048634263	04	P.F CON REDUCER OD1820/OD1520	4-80-655-83182		--- / ASTM A 387 GR.11 CL.2	C	250 348 / 1
WDMBX41Z0486305ZZ	03	P.F MITRE BEND 90DEG OD1820X8	2-80-655-16054	15	--- / ASTM A 387 GR.11 CL.2	C	1574 681 / 1
PI24917Z00919ZZZZ	02	BRANCH PIPE OD60.3X5.54 L=52	2-80-655-15988		--- / SA335P11	C	0 388 / 1
02 PI8Y513Z04863ZZZZ	01	P.F PIPE OD1820X8 L=2406 02	3-80-655-35566	12	--- / ASTM A 387 GR.11 CL.2	C	860 076 / 1

DETAIL B-B

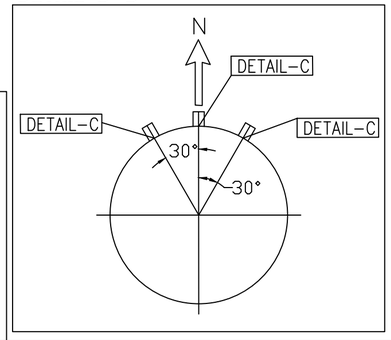

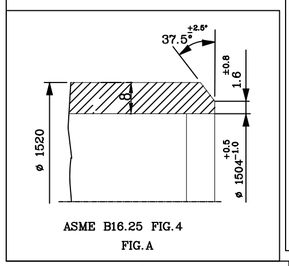

ASME B16.25 FIG.4
FIG.A

REV	DATE	ALTERED	M.P.K
02	13.05.19	APPROVED	TRINADH

ZONE: DRAWING REVISED AS PER LATEST EIL DRAWING. REVISION MARKED AS 02

REV	DATE	ALTERED	M.P.K
01	29.04.19	APPROVED	TRINADH

ZONE: DRAWING REVISED AS PER MAIL FROM EIL DT: 24.04.19 REVISION MARKED AS 01

N

CUSTOMER: INDIAN OIL CORPORATION LIMITED (HALDIA)

CONSULTANT: ENGINEERS INDIA LIMITED (EIL) NEW DELHI

NAME OF PROJECT: BS-VI, HALDIA

BHEL CUSTOMER NO: 7419

BHARAT HEAVY ELECTRICALS LTD., PIPING CENTRE, CHENNAI 600 017

	NAME	SIGN	DATE	NO OF ITEMS
DRN	M.P.K	-sd-	16.03.19	
CHD	TRINADH	-sd-	16.03.19	
APPD	C.SARAVANAN	-sd-	16.03.19	

DEPT. | CODE | GRADE OF UN TOL. DIM C/M/F | SCALE | WEIGHT (Kg). | ITEM No.

TITLE: 60-P-205-1901-K34D-IH-E

EIL DRAWING NO: | CARD CODE U 01 | DRAWING No. 2-80-655-15988 | REV 02

SIZE A2

V: A2